MT507-GRID

4" ROUND SOLID BRASS PLATED GRID SHOWER DRAIN

SPECIFICATION SHEET

A McAlpine Company
Mountain Plumbing Products

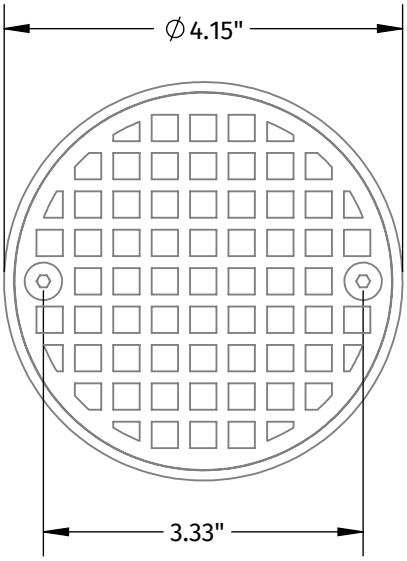

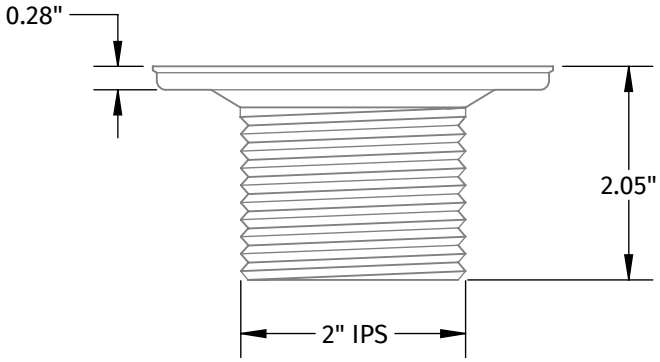

- SOLID BRASS DRAIN FOR TILED SHOWER FLOORS
- INCLUDES GRID W/ SCREWS & DRAIN NECK
- FOR USE WITH MT605A & MT605P Drain Body

WARRANTY

FOR WARRANTY INFO PLEASE VISIT WWW.MOUNTAINPLUMBING.COM/PAGE/RESOURCES/WARRANTY

FINISH CARE & MAINTENANCE

NEVER USE ANY HARSH ALKALI, ACID BASED DETERGENTS OR CLEANERS SUCH AS SOFT SCRUB®, SCRUBBING BUBBLES® OR COMET® TO CLEAN. DO NOT USE BRILLO® OR SCOTCH BRITE® PADS. THESE WILL ALL HARM THE FINISH. TO CLEAN, USE ONLY A DAMP SOFT CLOTH AND WIPE GENTLY. STANDARD WINDEX® CAN ALSO BE USED SPARINGLY. IT IS NOT NECESSARY TO WIPE HARD TO REMOVE SPOTS. TO MAINTAIN THE FINISH, WIPE WITH A SOFT DRY CLOTH AFTER USE. AN OCCASIONAL COAT OF PURE CARNAUBA WAX WITHOUT CLEANERS WILL HELP PORTECT THE FINISH.

SPECIFICATIONS SUBJECT TO CHANGE WITHOUT NOTICE